October 23-25, 2026

42nd Lane County Home Improvement Show

Presented by NW Natural

Exhibitor Manual - Please share with your employees setting up and working the booth.

- ❒ All Exhibit Space Must be Paid for In-Full by Sept. 1, 2026
- ❒ Check in at the Truck Door or Office upon arrival.

Show Location & Ship to Address:

Lane County Fairgrounds
Lane Co. Home Show – Your Co. Name & Exhibit #
796 West 13th Ave
Eugene, OR 97402

Exhibit Move-In & Drive-In Appointments:

See the text in your email sent with this manual

- If you have a Drive in Appointment, please unload, and pull your truck outside so aisles open up for others.
- "DO NOT Set Until" appointments near truck doors/lanes are set. If you need a change to your move in time/drive in appointment call now to discuss alternate booth locations.
- FREE forklift service runs **Wed 8am-6pm & Thurs 8am-6pm.**
- **Exhibits MUST be set up by Fri. 1 pm for Fire Inspection.**
- **All items out of aisles at 1pm Friday for Floor Scrubbers**
- **Friday 5:00 pm the HOME SHOW OPENS!**

General move-in hours are:

Wednesday, Oct 21.....8 am-9 pm (fork ends at 6pm)
Thursday, Oct 22.....8 am-9 pm (fork ends at 6pm)
Friday, Oct 23.....8 am – 12noon (no fork service)
Must be setting up by noon Friday for Fire Inspection

October 23-25 - Show Exhibit Hours

Friday	5:00 pm – 9:00 pm
Saturday	10:00 am – 8:00 pm
Sunday	10:00 am – 5:00 pm

Move-Out Hours:

Do NOT break down prior to 5pm.

Truck Door & Lane Exhibits must move out first on Sunday.
Sunday.....5:15 pm – 10:00 pm (fork runs 6pm-10pm)
Monday.....8:00 am – 2:00 pm (fork runs 8am-2pm)

Monday 2pm Move-Out Ends

Move-out ends at 2:00 pm on Monday, October 26th
All displays must be removed or the fairgrounds will dispose of or recycle all exhibit elements and displays at 2pm.

On Site Show Offices:

Rear of Convention Center – Room #3 East
Show Office Year-Round (541) 484-9247

For quicker response CALL US on Show Week:

Show Management:

Berg Productions, Inc.
PO Box 22905
Eugene, OR 97402

Phone (541) 484-9247

EugeneHomeShow.com
info@EugeneHomeShow.com

NEW Show Decorator – Furniture & Carpet Rentals

Save 20% on RENTALS if ordered by October 9

USE FORMS Enclosed: Rentals of Tables, Chairs, Carpets, and Furnishings via our NEW Decorator:
Trade Show Supply House, Inc.
See Forms on pages 12-13 in this Manual.
Phone 360-624-4498
Email Orders@TheDecorator.net

Show Electrician

Save $$$ if ordered by October 13

Each 10x10 booth is automatically given one outlet with 500 watts of power. Order additional power on page 11.
Lane Events Center
Attn: Event Coordinator
796 W. 13th Ave.
Eugene, OR 97402
Phone 541-682-4292
FAX 541-682-3614

Important Fire Safety Info:

- All cords must be heavy weight & grounded – 3 prong only.
- Use Multi-Strips directly plugged into the outlet. Then run your heavy weight grounded cords to appliances from the multi-strip.
- All material (fabric & decorative) must be flame resistant.

Mark this date on your calendar!

2026 Brochures & Application Links emailed the week after show.
Quick response will ensure you preferred placement in the show.
You can now sign up for the show in early NOVEMBER online:
EugeneHomeShow.com
March 12-14, 2027 ~ SPRING Home Show
47th Lane County Home & Garden Show

NEW: No Duct Tape ALLOWED to tape down carpets any longer. Exhibitors must use ONLY Painters or Gaff Tape. LEC will now invoice exhibitors for residue clean up.

2026 Fall Show

This manual advises you of your rights, restrictions and the show requirements. It answers many of the questions that you may have about your display and the show. Please read it carefully and advise exhibit staffers as to its contents. The enclosed information will help you be successful at the show. Please call us a week prior to the show with any questions ~ as show week we cannot assist you with logistical issues.

The Fall **Official Show Guide Magazine with two complimentary VIP tickets will be direct mailed to 25,000+ targeted higher value homes in Lane County** – landing in mailboxes 12 days prior to show opening! Admission remains free with 3 cans of food, benefiting FOOD For Lane County. Guests can purchase tickets for $5 at the door if they forget their donation. We will be emailing complimentary tickets for your staff, family, clients, and prospects – share these tickets in your eblasts, company news, and mailings.

Dynamite advertising and public relations campaigns are already underway! **The Fall Show Media Campaign will have over 13 Million Gross Impressions!** We've bought four live radio remotes, and over 800 ads will run on nine radio stations and Spotify. Poster & Digital Billboards will go up in Eugene, Springfield & Junction City. Television commercials will air on KEZI-9, KVAL and Comcast beginning the week prior to the show. Over 16,000 past attendees will receive our E-newsletter with VIP tickets. We've added more OTT Streaming Video Ads , google digital, YouTube, Facebook, Pinterest, & Instagram swizzle and video ads to deliver almost **Four Million Gross Impressions** to assure that reach new customers!

Remember to mention **"See our Exhibit at the Lane County Home Improvement Show"** in any pre-show advertising, newsletters, website and promotions to drive traffic to your exhibit. Show logos are online in Fall Exhibitor Forms.

Connect with us on social media - tag photos #EugeneHomeShow #LaneCountyHomeShow
https://www.facebook.com/EugeneHomeShow

Remember to extend your exhibit event at EugeneHomeShow.com See the attached flyer for free Exhibitor Benefits!

Arrival at the Show 4
Balloons 7
Booth Information ..... 2 & 3
Carpeting 3
Check-In 4
Contract Terms 10
Daily Operations ..... 6 & 7
Decorator ONLINE Rentals ..... 12 & 13
Driving Inside Buildings ..... Cover & 4
Electricity 3, 7, 8, 11
Electrical Order Forms 11
Entrances 6
Exhibit Design ..... 2 & 3
Exhibit Installation ..... 4 & 5
Exhibit Move-In Hours ..... Cover & 4
Exhibit Move-Out Hours ..... Cover & 8
Exhibit Removal ..... 6 - 8
Fairgrounds Map 1
Fire Regulations 9
Food & Beverage 8
Handouts & Literature 7
Insurance ..... 7 & 10
Landscape Information 3
Lodging & RV Parking 5
Noise & Music 8
Parking 5
Pets & Children 7
Renting Tables, Carpet ..... 3, 12 &13
Restrictions ..... 7 & 8
Rules & Regulations ..... 7 & 8
Security ..... 6 - 8
Shipping Information ..... Cover & 4
Signs 3
Smoking 7
Successful Exhibiting 2
Unoccupied Space 4
Utilities ..... 3 & 4
Wi-Fi 3

Public Show Hours:

Friday	October 23	5pm-9pm **NOTE 5pm Opening**
Saturday	October 24	10am-8pm
Sunday	October 25	10am-5pm

Held at:
Lane County Events Center/Fairgrounds - Convention Center
796 West 13th, Eugene, Oregon 97402
Telephone 541-484-9247

Directions:

Merge onto I-105 W/ OR-126 W via EXIT 194B toward EUGENE.
Go over the river, stay in the middle lane toward JEFFERSON ST. toward FAIRGROUNDS.
As you come down the bridge go straight onto Jefferson St., stay in the right lane.
Cross through 13th St. going straight into the Fairgrounds rear parking lot abutting the Convention Center Truck Doors.

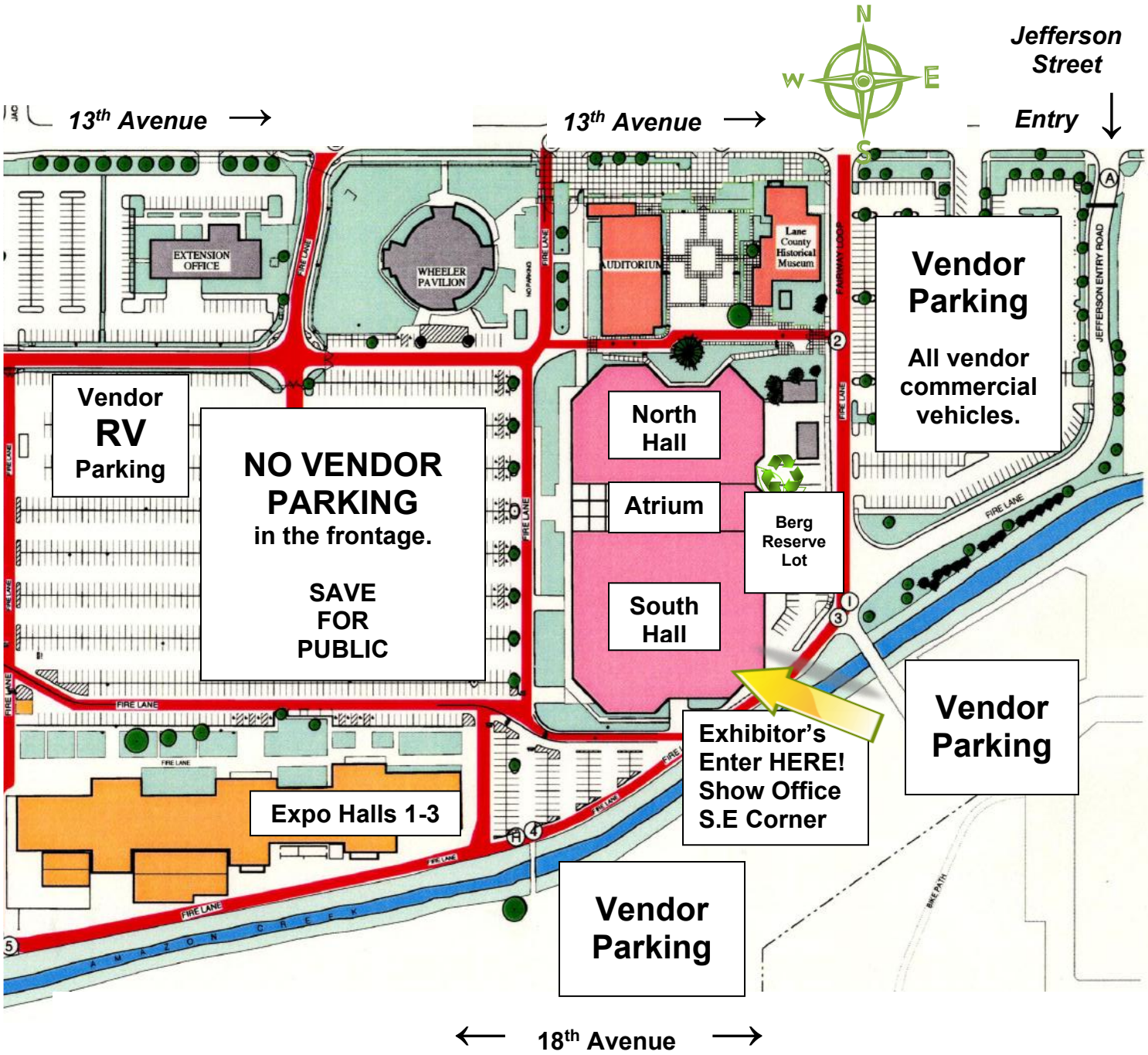

Important Guidelines on Booth Construction and Height Restrictions

Remember - It isn't so much as where your booth is located as what you choose to do within your exhibit that makes your showing a success! Use imagination & creativity! Develop your own professional backdrop; use signs that spell out consumer benefits (save money, time & frustration), add color and plants.

Please contact us anytime, for advice on all aspects of your exhibit. We welcome your calls on design, exhibiting, selling, and generating leads.

10' deep booths: We provide each exhibit with 8' high back drape and 3' high side drape (unless otherwise noted on your contract). Your display MUST NOT BE TALLER THAN 8' high across the back wall, unless your exhibit is placed against the building's hard wall. All exhibit and display racks over 4' tall must be located in the rear 4' of the booth (unless you have booked your space asking for 8' high side drapes). In the front 6' of your booth, your exhibit must drop down below 4' – this preserves each vendor's visibility. The exterior of any part of your display or structure facing adjacent booths must be finished in neutral colors at your expense. No signs allowed above the 8' drapes. Booths along the perimeter have taller signs with management approval.

There are a few exceptions to the above rules, these exceptions must be stated on your contract and pre-approved by show management. We try to place all high-sided exhibits side by side, as high-sided exhibits block visibility. If you are planning to display an exhibit with high sides, please tell us when booking your space. End cap 20'x20' booths or larger will have more freedom to vary from these policies – call us to discuss your backdrop if you are a new vendor. No signs with commercial messages may face into neighboring exhibits.

If you are constructing a hard wall, remember to deduct 2" off the width of any back hard wall and 1" off the depth of side hard walls. So, build a 10'x10' booth with a 9'10" wide back wall and 9'11" deep side walls. A 10'x20' booth would measure 19'10" along the back wall and a maximum of 9'11" along the sides. These 2" & 1" deductions allow for the drapery poles that divide each exhibit space – and only need to be factored in for the depth and width.

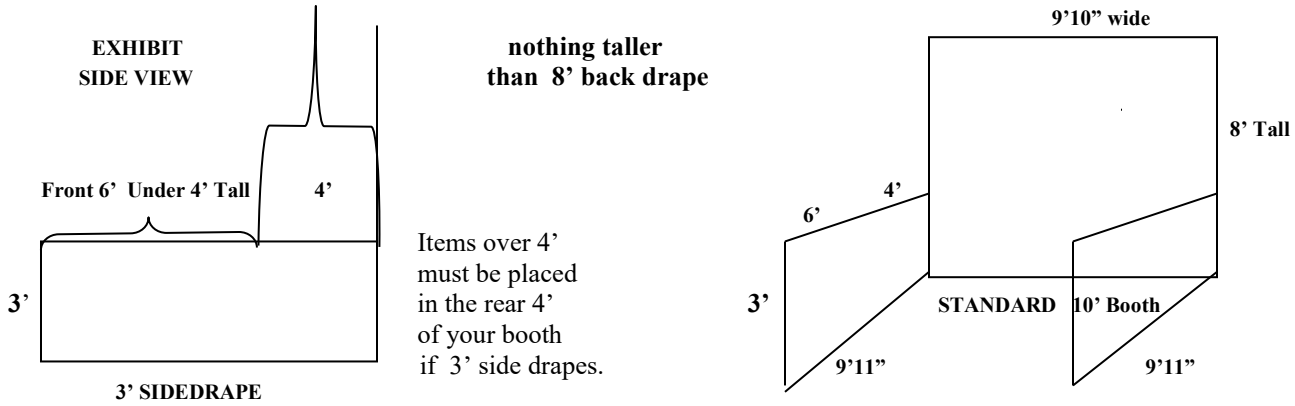

Please note that the above rules apply to your sign too. Your sign must be no higher than 8' along the back and face forward with a **finished backside**...

- ***Floor covering improves the image of your exhibit and is required excluding Atrium.***
- Fine furniture need not be skirted. Nice furnishings improve your business image and your sales.
- Professionally skirted tables (form enclosed) with floor-length pleated skirting looks the best.
- Store-bought tablecloths must be ironed and must cover folding table legs & all stored items.
- Professionally-made signs only - no magic marker, grease pencil or "homemade" signs.

Booth Information:

☑ **Order carpet & furniture ONLINE – see page 12 & 13 for Rates & ONLINE instructions.**
Save on Carpet & Furnishings if ordered by Oct. 9th
Black Drapes used throughout the show. **Please do not pin, staple or tape to the drapes** – Use FREE "S" hooks from our office & fishing line. Pipe can support banners & lightweight items only - use easels for heavy items. You will be billed for drapes that you snag, rip, or stain @ $85 each. Drapes, rented furniture and carpet come out Sunday night – take down signs on Sunday close of show.

☑ **Exhibit signage is provided by the vendors**. All signs must be professionally made - absolutely no handmade signs. FREE **"S" hooks to hang signs are in the office. Use "S" hooks to hang signs from the drapery poles. Do not tape, staple, pin to drapes. Do not nail to walls.** Hang all signs under the 8' height rule. Remove all signs at show closing, as all drapes come down on Sunday night. Design signs so the public knows your co. name, products & services – signs communicate!

☑ **Order additional (form enclosed) Electricity – Save $$$ if ordered by October 13th.**
Each 10x10 exhibit will be given one fused 120 outlet, of up to 500 watts. **Use mu1ti-plug strips and heavy duty (orange) grounded extension cords to run electricity - no lightweight cords are allowed by code.** If more power is required, place your order with the facility at your expense. Orders placed after Oct. 4th cost more. At the close of show electricity will be disconnected. Unplug all Sunday night.

☑ **Exhibit Booth Construction - New Fire Rules:** Decorative materials must be flame resistant. Wood less than ¼" shall be treated with a flame-retardant coating. All corn stalks, hay bales, fabrics hanging for decor… must also be coated with fire retardant available at Jerry's Home Center or National Fire Fighters in Eugene. Please pre-spray these items prior to bringing them into the booth.

☑ **No POP UP Tents or Canopies permitted inside – unless pre-approved by show management. These tents violate the height and sign restrictions and cut off your neighbor's sightlines.** No logos or signs are permitted to face into the neighbors exhibit at the pipe & drape line.

☑ **Height Restrictions on Exhibitor/Factory Built Boots:** No exhibit shall exceed 8' in height across the back wall. Items over 4' tall, must be placed in the rear 4' of the booth – so you don't block your neighbors sight line. Any exposed surfaces facing an abutting exhibit must be finished in a neutral color – no logos, or designs. Items in the front 6' of the booth must be less than 4' in height (unless you have management permission). Some exhibits have 8' side drapes. You may go up to 8' along any 8' drape. All corner exhibits may go to 10' in height on the outside corner. No high objects in the front 6' of your booth without management's pre-show approval. Call us today with questions.

☑ **Floor Covering Required: Carpet, Astro Turf, Vinyl, etc. All carpet must be taped down with PAINTERS or GAFF Tape only. The Fairgrounds has banned duct tape for carpet tape downs. Exhibitors will be billed for tape residue clean up if used as of the 2023 show.** Bring your own painters tape or gaff tape for floor coverings. No carpet can extend beyond the contracted exhibit space or in the aisle. Rented carpet is removed Sunday night, so please remove any fragile or heavy items Sunday. The Atrium has a wall to wall black commercial carpet – do not tape to the facility carpet and protect it with mats if needed.

☑ **Water:** Water is available in the floor boxes marked "E" on the floor plan. These boxes also have drains, gas and electricity. There are also hose bibs under the sinks in the restrooms. Bring your own hoses, buckets and mops. Bring a sump pump to drain tubs.

☑ **Landscapes:** Cover floor with heavy weight plastic if using bark, plants, or ponds. Forklifts can deliver all palletized items, block and plants to your space. Schedule delivery with management.

☑ **Wireless Internet:** Free LEC Wi-Fi is available in the Convention Center. The network is **LEC-Wi-Fi**; the password is **October2026!** – verify in office or truck doors onsite. Due to limited bandwidth, please limit to business use only. We cannot guarantee Wi-Fi in all locations, quality of bandwidth. If Wi-Fi is crucial to your business, please secure a hot spot.

☑ **Shipments:**
Accepted Show Week: Wednesday thru Friday - 8am-5pm (but fork only runs Wed & Thurs)
Shipping Address: Lane County Events Center – HOME SHOW
Exhibitor Company Name & Booth #
796 West 13th Ave., Eugene, OR 97402

Move- In Guidelines:

☑ **No moving in or out via the front doors of any building.**
Forklift service runs Wednesday & Thursday 8am - 6pm daily. No Fork Service on Friday.

☑ **Move-in Schedule –** Use the appointments in the text of the manual email.
If you must change an appointment, this MUST be done before September 30th. Some appointments cannot be changed due to the location so please call early (in a truck lane, truck door…). If you do not have a drive-in appointment, you must handcart or forklift to your booth. Bring your own carts, or you may have to wait a bit for show carts.

Some locations have restricted move-in times. Exhibitors on the center aisles and near the truck doors have restricted move-in times, and must move out Sunday night. Drive-in appointments are not flexible as the show is built toward the truck doors.

On Wednesday and Thursday if you enter the building by 9:00 pm you may work as late as you wish. Our night guard will open doors when you are ready to leave. Once your move-in time starts, you may work as long as you need to complete your exhibit. You may continue to move in until the Fire Inspection on Friday at 1pm – but all electrical connections must be made by 12noon for this inspection. Please all items from aisles by Friday 1:00 pm for cleaning.

Atrium Exhibits must move in large items via the North or South Hall – see Email please.

On Thursday 12noon all exhibits will be forked or handcarted except the exhibitors with drive in appointments near the truck door.

☑ **Arrival & Check-In at the Truck Doors or Show Office prior to moving in:** Verify your booth location #, confirm payment in full, pick-up badges and "S" hooks for signs.

☑ **Move-In Regulations:** * All exhibits are required to be partially set up by 12noon on Friday. Anyone wanting to move-in later than Friday 11am must notify the show office the week prior to the show so we can review electrical connections. Exhibits not being actively set up by 12noon Friday will be forfeited, as no move in can occur once the fire inspection is completed.

☑ **When To Move-In: See your move in appointment on the text of the manual email.** Bring in heavy items and construct large exhibits on Wednesday and Thursday by appointment. For security reasons please hand-carry small valuables in on Friday. Access to the building will be reduced as move-in progresses. Permission to drive in is at the discretion of the door guards at all times for safety reasons. If you need a drive-in appointment please call our office immediately so that we accommodate changes. If you must change your move-in appointment, call 541-484-9247 by Sept 30th.

☑ **Exhibits Requiring Special Handling & Construction:** If your display requires special handling due to size, weight, etc. or you feel there may be problems at move-in, contact show management **now**. Oversized delivery vehicles, large exhibit pieces and exhibits near the front must come in during the appointment on the front of this manual. Any exhibit that requires extensive construction must come in on Wednesday, unless restricted from doing so. Guard rails, platforms, steps, must be built to code and secure enough to support the heavy show traffic. Displays must also be child proof, trip proof and safely constructed. You must carry insurance and comply with all building codes for temporary exhibits. Nothing may be in the aisle.

☑ **Vehicles & Loading:** If you must drive into the building you can only do it during the **drive in appointment in the email included with this manual.** Any driving into the buildings is at the discretion of the door guards. Drive slowly and with caution. Unload your vehicle quickly and remove it from the building or loading dock. Do not block the aisle while constructing exhibits. Please clean up any oil that your vehicle drips (the door guard has spill towels). Do not leave unattended vehicles parked on loading docks.

☑ **Truck Doors:** Move in through the truck doors in the rear of the Convention Center.
All the front lobby doors will remain locked during move-in & non-show hours. South Hall truck door is 24'w x 13'10"h. **North Hall is 13'10"h x 13'w.** Call immediately if there are problems moving in these sized truck doors. All large items must come in when your move-in time is scheduled.

☑ **FREE Forklift Service 8am-6pm on Wednesday & Thursday for move in**. Sunday 5:30 – 10pm & Monday 8am -2pm. Complimentary fork service at all Berg Shows. All equipment and materials will be moved at the exhibitor's risk of all/any damage. For your benefit & safety, all display materials must be crated or palletized. Request this service with door guards. Expect a 10 or 20 minute wait. Give our guard your location, load information and we will queue your company up. Move in forklift service ends daily at 6pm. Sunday it ends 10pm and on Monday at 2pm.

☑ **Storage:** Crate Storage is not available at the Center & must be stored off premises, unless permitted by show management. We do have limited storage in a meeting room if it can fit through the man door – this storage will be locked and can be opened twice daily for you to restock. If you want to park a commercial vehicle during show days ask the show office for the proper location.

☑ **R.V. Parking**: Dry R.V. Camping (electricity, no water) on the grounds is possible with a permit available for purchase at the Fairgrounds business office on 13th. The permit cost is $30.00 per night (non-refundable) or $100.00 per week. Park RV's at the 2nd electric poles past the round building along the north chain link fence. Ask in the show office for the specific location if you are unsure. One gate will be dummy locked at the west end for you to come and go to dinner after hours. You will be asked to move if you park in the public lot. There is a self-service option if the fairgrounds office is closed.

☑ ***Hotels: Book online for best deals in Eugene, Oregon. There is not a Duck Home Game on Saturday!!***

☑ **Exhibitor Parking & Entrances:**
Convention Center exhibitors must park across the road from the small lot behind the Convention Center and enter through the two doors marked as exhibitor's entrance. Look for the signed lots for exhibitors. Only cars with an official parking pass on the dashboard may park in the small fenced lot behind the Convention Center (at truck doors) during show hours – all other vehicles will be towed.

☑ **Commercial Vehicles & Outdoor Displays:** Only exhibitors that have paid for outdoor exhibit space will be permitted to park commercial vehicles in the front of the Convention Center. Other commercial vehicles must park in the rear lot of the Convention Center and in the gravel lot across the creek.

☑ **Security:** The building will be locked during non-show hours and show security will be on duty at that time. Exhibitors can enter one hour prior to the show opening each day. Passes are not needed at the rear of the building. If you need to enter the building earlier to work on your display call the show office 541-484-9247. Knock hard on the glass doors by the show office (or at the exhibitor's entrance in the rear) and wait for a guard. **Sign in & out, stay in your exhibit only, DO NOT enter other exhibits unless staffed.**

We have hired additional security to work the show floor. K-9 Dogs now provide the show with nightly security. We have security who can escort you to your vehicle at any time during the show, and up to 15 minutes after show closing. Please let the show office know you wish to be escorted out to your car.

☑ **Vehicle Break-ins:** The Lane County Fairgrounds on occasion has experienced car/truck break-in's. **Do not leave any valuables in view in your vehicles during move-in/out or during the show.**

☑ **Protecting Valuables:** We strongly recommend that you do not place small items in your exhibit until Friday am, before the show opens. Cover anything small or valuable with sheets or place out of sight near the rear of your exhibit. Please follow this procedure during non-show hours as well. On Sunday night do not leave small items, tools and valuables that could disappear easily during move-out.

☑ **Merchandise Removal & Sold to the Public:** If you are selling items that can be hand carried, please provide a bill of sale. This will serve as proof of ownership to security. During show days merchandise being removed by vendors must go out the doors by the show office, or the exhibitor's entrance. Please notify show management of the removal of electronic equipment at night during move-in.

☑ **Food Service – Fall '26:** Food & Espresso will be in Concessions Stands. Beer will be served in the brick hallway. Food will be served from Concessions.

☑ **Exhibit Staffing:** If your company is facing challenges staffing all show hours, please place a sign in your exhibit as to when you will be staffing for the guests wanting to speak with you. Bring a stack of business cards to our show office and we will restock them for you during unmanned times. Remove small valuables, or hide them under a skirted table, as we cannot watch all exhibits that are unmanned.

☑ **Cleaning:** Maintenance cleans floors, and empties all trash on Friday at 1pm. All packing materials must be removed - please observe this "Cleanup" deadline. The aisles will be cleaned daily prior to our opening, and as needed during the show. You must clean your exhibit space - bring your own vacuum, broom, and cleaning supplies. Exhibitors serving food products, must clean to meet food regulations. **Place all flattened cardboard in the recycling bins out back.** Recycling bins are available throughout the building for paper/cardboard, cans, bottles, wood, as well as trash cans.

☑ **Nightly Closing:** Secure small items, leads, price lists, and please cover merchandise with sheets. We must be out of the building within 15 minutes after closing on Friday and Saturday night for the alarm system and K-9 patrols. The show staff will be on site for about 15 minutes after the show closes. Please request an escort if you are uneasy about walking to your car alone. We have night guards in each building, alarm systems, and K-9 patrols. **We are happy to escort you to your car at night – just ask at the office.**

Berg Productions is the Show Producer. Locally owned with 43 years of show production experience in the Lane County Convention Center. We have experienced staff on the show floor at all times: during move-in, show hours, non-show hours, and move-out. Our staff and show security have been in our employment for many years.

Trade Show Supply House, Inc. is our NEW Decorator/Contractor for the pipe & drape, tables, carpeting and signage service. Trade Show Supply House, Inc. will handle all the orders for tables and carpeting. Trade Show Supply House, Inc. drives the forklift for the event compliments of BERG PRODUCTIONS. Exhibitors assume all risk for damages of drayage while being forked. For forklift service, ask BERG staff, at the truck doors or the office, or request service with a nearby forklift driver. Forklift service ends early at 6pm on Wed & Thurs, at 10pm Sunday night, and 2pm Monday.

Lane Events Center provides all electrical services. Berg installs one 500 watt plug-in outlet in each 10x10' exhibit space in advance of your arrival. Please order your additional electricity early for discounted prices.

The Lane Events Center is responsible for Operations: Maintenance and Janitorial services. Please request needed services at the Berg Show Office or Information Booth.

The Lane Events Center is responsible for Food Services. If you have issues speak with their counter staff, Berg Show Office, or the Info Booth. **Oregon Beverage is the Concessionaire for the Bars.** If you have issues speak with their staff, or Berg Staff.

Restrictions & Rules:

- ☑ **No Inflated Balloons** are allowed to be passed out or sold.

- ☑ **No propane, gas or compressed air tanks** allowed in building during the show.

- ☑ **No burning or open flame** in building, without written management permission.

- ☑ **No Children or Pets allowed at Move-in or Move-out!** Anyone that chooses to bring a child or pet to move-in/out will be asked leave the building. Our door guards will enforce the policy "no children or pets allowed". Older children will be asked to stay within your booth space by our staff. It is very dangerous at move-in/out - forklifts, trucks, saws, gas & electrical lines... Show personnel will not watch them - you will be responsible for any injury to them or damage that they cause to other exhibits.

- ☑ **Liability:** The exhibitor is entirely responsible for the space they contracted for and agrees to reimburse the management for any damage he or his employees do to the building, equipment, other exhibits or people. Each exhibitor has accepted the all terms & conditions of the lease contract and agrees to all fire regulations. See the enclosed copies of these documents.

- ☑ **Insurance:** The exhibitor shall secure and maintain liability insurance naming Berg Productions, Inc. and the "Lane Events Center, a division of Lane County", as additional insured. You can usually secure a rider on your present business policy. A certificate of insurance is to be furnished to the Show Management. Show Management or Lane Events Center shall NOT be responsible for loss or damage occurring to the exhibit or sustained by the exhibitor from any cause. Coverage for your exhibit and product is your personal choice.

- ☑ **Fire Marshall Inspects on Friday:** Read the enclosed letter from the Eugene Fire Marshall. Any exhibit found out of compliance will be tagged with a notice. The correction of any violations must be made immediately, or the exhibit will be removed from the show. **No lightweight extension cords are allowed.** Use heavy-duty, grounded extension cords & UL approved multi-strips.

- ☑ **Flame Retardant for Decorations & Fabrics:** Decorations (cornstalks/hay bales & etc.) must be coated with fire retardant – place the empty cans or the receipt near the decorations for the inspection. Fire retardant available at: National Fire Fighters ph. 541-485-3566 or a local hardware store.

- ☑ **No Soliciting in the Aisles, Lobbies or Parking Lot:**
  Do not work the aisles or lobbies, place literature/cards on the front lobby tables or on cars in the lot. Please report any such behavior to the show office - anyone trying to sell to you at the show is robbing you of selling time. Let them know they are freeloading, or tell us, and we will clarify our no soliciting policies. If you have competitors harassing you, notify the show office.

- ☑ **Undignified Behavior:** Any exhibitor whose behavior disrupts neighboring exhibits or their ability to conduct business will be given one warning to stop. If exhibitor behavior is aggressive no warning will be given. Management reserves the right to have show security remove, and ban the exhibitor from the show if behavior persists. Uncooperative exhibitors will have their display removed by security without refund. While problems such as these are rare, please do ask show management to handle any issues.

- ☑ **Liquor:** Oregon State Liquor Laws prohibit the use of alcoholic beverages in public buildings unless specific licenses have been issued. Only the Center can serve/sell alcohol. Bottled wine sellers need a copy of their license available. We suggest vendors refrain from drinking at the show, as it will only hurt business. Drunken exhibitors will be asked to leave the show.

- ☑ **Smoking & Vaping is no longer allowed on Fairgrounds property – inside or outside.**

☑ **Food & Drinks:** Packaged food, drinks and wine to be consumed at home may be sold in your booth. Only several-ounce samples of food or drink can be passed out at the show. Bite size portions are allowed for demonstrations - nothing larger is allowed by the Fairgrounds Management. Any food handling must comply with the State of Oregon Laws. All food must be iced, dishes and all prep surfaces sterilized nightly, or in the morning prior to opening. Hands must be washed and use gloves for food products.

☑ **Sound Devices:** No loud sound devices, megaphones, or loudspeakers are allowed. Sound devices, TV's, musical instruments must be kept at a respectful volume. Report any problems to the show office. Management will deal immediately with all sound problems. Sound MUST NOT interfere with others.

☑ **Music & Copyrighted Material:** Exhibitors that use copyrighted material and music are responsible for the contract with the owner's of said material (see enclosed contract).

☑ **Competing Exhibitors & Healthy Competition:** Sell your products and company on its benefits and features. This show has a "No Negative Selling Policy!" Negative selling (downgrading competitors) only confuses the public, turns them off, and keeps them from buying at the show. While rare, any exhibitor that harasses other exhibitor's, sells negatively, or acts unprofessionally, will be removed from the show and the company will not be invited back to future shows. Please advise your sales staff.

☑ NO DUCT TAPE ALLOWED ON THE FLOORS OF THE CONVENTION CENTER – USE LOW TACK PAINTERS or GAFF TAPE ONLY.

Move-Out Guidelines:

☑ **Move-Out Schedule:**

Sunday, October 25th……..5:15pm - 10pm* Work later if in the building by 10pm.
Monday, October 26th ……8:00am - 2pm** You must be completely out by 2pm.

*You may work as late as you want on Sunday night – just enter by 10pm when doors go down.
**Anything left in the building at 2pm on Monday, will be recycled by the fairgrounds.

☑ **You must wear the move-out labels at the close of show to go out with valuables or come in for anything in your booth.** These labels are re-designed for each show and given to you on Sunday Morning by our security. No staff can come into the building without a visible label on their jacket.

☑ **No signs, displays can be broken down or removed from the show until 5:15pm Sunday night.** Rushing down aisles with handcarts is dangerous while public is in the show. Give the public 15 minutes to leave the building. Vendors who break down early will not be invited back to future shows. .

☑ **Do not park in the small lot abutting the Convention Center without a parking pass.** Violators will be towed during the show. That lot is reserved for seminar speakers, EMT's and media during show hours. At the close of the show, on Sunday 5:15pm, we will marshal in the trucks at the move in lanes first as they must vacate immediately. By 6:30pm the small lot is wide open, so take down small valuables go have dinner, and come back to break down when it is wide open & the fork is running.

☑ **NO MOVING OUT the FRONT DOORS, the LOBBY, and NO vehicles on the sidewalks!**

☑ **Move-out Procedure & Process:**

1. Remove signs and banners at 5:15pm - the pipe & drape come down Sunday night.
2. Pack up and remove small and valuable items – or anything that could disappear Sunday night.
3. Unplug all electrical outlets, as the outlets will be removed on Monday morning.
4. Do not park on the ramps or by doors on Sunday unless you have been given a parking pass.
5. Small vehicles will be allowed in the building after 7pm Sunday in the most accessible areas. Large vehicles will be admitted inside after 8:30 pm. Management will give permission for certain exhibits to get out of the way first. Driving into the front of the building is best after 10am Monday. Center aisle exhibits, and truck door exhibits must pull back their display at close of show on Sunday night so that vehicles can drive down the center aisle.
6. Bring extension cords with you on Monday if you will have to use power tools.
7. All building security will end at 8am Monday morning – please be present to protect valuables.

Fire Codes for temporary exhibits at shows in Eugene, Oregon.

- **Highly Flammable Decorative Material (except for products for sale), such as hanging fabric, must be flame-proofed to be acceptable to the Fire Marshall.** Combustible materials shall be flame resistant, wood less than ¼" shall be treated with flame retardant coating. The Deputy may require a sample of the booth construction and decorative materials to undergo a flame test to verify flame resistance.

- **Any roofed and enclosed exhibit larger than 10'x10' must have a quality fire/smoke detector installed in the display.** Doors and windows must remain open. All interior lights must be turned off at the close of the show each night. Each enclosed and roofed exhibit must have a 2-A:10-B:C fire extinguisher in it as well.

- **Exhibitors shall remove, from the building, all packing material including crates and other combustibles not essential to their display.**

- **In Individual Exhibits the minimum aisle width will be 36"** where table, counter, furnishings, merchandise or other similar obstructions are on one side of the aisle, 44" when obstructions are on both sides (i.e. when you have a walk thru display).

- **Signs, banners, and decorative materials shall not be suspended from the sprinkler piping.**

- **NO portable space heaters or open flame is allowed in the building**.

- **NO Compressed Gas, Helium or Fuels are allowed on the show floor.**

- **Booths used for cooking shall have a minimum of one fire extinguisher with a rating of not less than 40B:C.** Approved UL appliances shall be placed on noncombustible surface materials. Cooking oils & alcohol are limited to 1oz. A wet towel must be available to smother flames.

- **Vehicles on display shall have the batteries disconnected. Fuel in tanks shall not be more than ¼ full or 5 gal, which ever is less. Fuel tanks shall be locked and sealed.**

- **Extension cords of #14 gauge or larger heavy weight cords and multi-plug adapter with circuit breaker are allowed – if the multi-strip is plugged directly into the outlet first, then plug extension cords into the multi-strip. DO not overload the multi-strip as your outlets are only 500 watts each. You may use snake head cords directly plugged into the outlet. NO lightweight two prong cords all allowed.**

- **YES! Plug extension cord into multi-strip.**

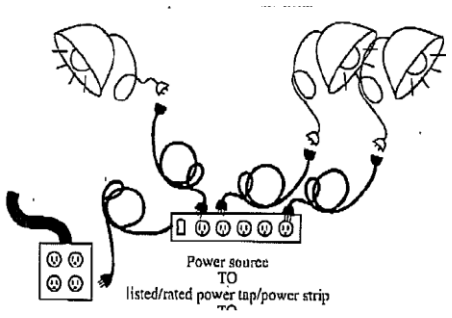

- **YES! Extension cord to appliance.**

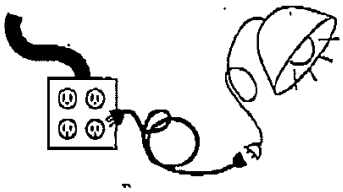

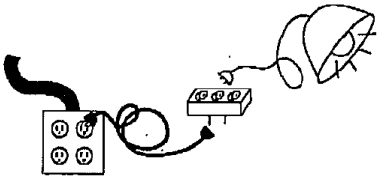

NOT OK - To plug multi-strip into extension cords!

Note: Fire Marshal will inspect exhibits and electrical connections on Friday at 1pm.

2026 Lane County Home Improvement Show – *Terms and Conditions*

1. **EXHIBIT HOURS** - Management shall determine and publicize the hours the Show will be open to the public each day.
2. **MERCHANDISE REMOVAL** - Exhibitor must provide Customers receipts for merchandise sold. No exhibits, part of an exhibit or unsold merchandise may be removed from the Space or Building until 5:00pm on Show's last day without Management written approval.
3. **DELIVERY** - All shipments to Exhibitor at the Building must be PREPAID by Exhibitor.
4. **DISPLAYS -** No signs, partitions, apparatus, shelving, etc., may extend more than eight feet high in the rear of Exhibitor's Space if Space backs up to another exhibit. All exposed parts of Exhibitor's Space and display must be finished and or covered so it is not unsightly when viewed from other booths.
5. **RUNNING OF ENGINES** – Exhibitor may not operate any engine, including but not limited to oil, propane, diesel or gasoline engines, inside the Building.
6. **SPACE LIABILITY -** The Exhibitor is entirely responsible for the Space occupied by him and shall not injure, mar or deface the Space, Building or other premises. The Exhibitor shall not drive or permit to be driven any pins, nails, hooks, tacks, or screws in any part of the Building. Furthermore, Exhibitor shall not affix advertisements, signs, etc., or use adhesive type materials to the walls or windows of the Building(s). Automobiles, trucks and similar conveyances displayed by Exhibitor in the Space shall have drip pans and/ or protective material under them to safeguard the floor from oil stains etc., and all landscaped areas must have a similar barrier under them to safeguard the floor. The Exhibitor agrees to reimburse the Management, and the Lane Events Center for any loss or damage to the premises or equipment.
7. **AISLES -** The aisles, passageways, lobbies, and overhead spaces beyond Exhibitor's assigned Space remain under the control of the Management and no signs, decorations, banners, advertising material, or exhibits, will be permitted in those areas except by written permission of Management. All Exhibitor's personnel must remain within the confines of Exhibitor's Space, and Exhibitor shall not erect signs or display products obstructing the view, occasion injury, or disadvantageously affect the display of other Exhibitors. Exhibitor's display must be able to accommodate a reasonably sized audience for demonstrations.
8. **SPACE** - The Exhibitor's Space is to be used solely by the Exhibitor and no portion can be sublet, assigned or otherwise used by any other person or business. The Exhibitor shall forfeit its right to the Space; all prepaid space costs and upon demand pay any balance owing to Management if it fails to occupy or use its Space during the Show or fails to have its exhibit completed and in place by 12noon on the opening day of the Show. If Exhibitor forfeits its Space or this Agreement is terminated for any reason, Management may re-rent.
9. **REASSIGNMENT** - Management may move Exhibitor to another space location, or remove Exhibitor and its display or exhibit altogether, if necessary to conform to any Building, City, County, State, or Federal laws or regulations. Management may move the Exhibitor's space location to meet display requirements, guidelines, and needs of the Management.
10. **PARTICIPANTS** - This application and agreement does not reserve for, nor guarantee to, Exhibitor any specific space or priority, right of first refusal, or any other manner of participation in any future shows.
11. **ALCOHOLIC BEVERAGES** - Exhibitor and its employees, agents and guests shall not consume any alcoholic beverages except in designated areas. Management, in its discretion, may remove Exhibitor and its exhibit from the Show without refund in violations.
12. **RESTRICTIONS** - Management reserves the right to restrict or remove Exhibitor for a display or exhibit that has been falsely entered, violates this agreement, or is deemed by Management in its sole discretion as unsuitable or objectionable. Exhibits deemed unsuitable or objectionable must be removed if the objectionable condition is not immediately corrected after one verbal warning. Unsuitable and objectionable exhibits include, but are not limited to noise, public address systems, persons, animals, birds, conduct, printed matter, odors, food, or anything objectionable to Management, Building administration, or the general public. Exhibitor will not receive a refund for such removal. No inflated balloons or sharp objects may be handed out or sold. No compressed gas or air tanks are allowed in building during show hours. No microphones our sound systems without written permission of Management.
13. **USE OF COPYRIGHTED MATERIAL** - The playing, performing or other use of copyrighted television or radio transmission, music, videotape, audio-visual material, or any other work, whether live or recorded, by Exhibitor or its agents, representatives or employees is expressly prohibited unless the exhibitor or its agents, representatives or employees have contracted with the owner, ASCAP, BMI or a similar organization to use the work at the show. Exhibitor agrees to indemnify, defend and hold harmless Berg Productions, Inc. (and its respective officers, directors, owners, employees, insurers, agents, representatives and assigns) against any and all claims and costs of defense, or fees paid by Berg Productions, Inc. to ASCAP, BMI, or similar organizations arising from any unauthorized use of any work by Exhibitor or any of its agents, representatives or employees.
14. **INSTALLATIONS** - Any special carpentry, wiring, electrical or other work, steam, water or drainage connections shall be installed at Exhibitor's expense, and within the Building and Management's rules and requirements.
15. **ALL EXHIBITS MUST COMPLY WITH ALL LAWS, ORDINANCES, REGULATIONS & FIREMARSHALL INSTRUCTIONS** - All Building, City, County, State, and Federal Space and display shall be obtained by the Exhibitor at his own expense prior to the opening of the show, and Exhibitor may be removed without refund for non-compliance.
16. **ELECTRICITY** - 120 and 208 volts, 60 cps, single or 3 phase, is available in the building. Each 10x10 Exhibit Space is furnished with one fused 120-volt duplex receptacle outlet of up to 500 watts capacity, without charge. All electric connections shall be equipped with an Equipment Ground Conductor. Exhibitor can purchase additional electrical from the Facility.
17. **TERMINATION OF CONTRACT – Any termination or cancellation by Exhibitor must be in writing.** If this agreement is terminated or cancelled by Exhibitor for any reason, or by Management because of Exhibitor's default or violation of the terms of this agreement, then monies paid to Management by Exhibitor shall be retained as follows: If cancellation occurs 60 days or more before the start of the show, then Management shall retain 25% of the entire cost of the Exhibitor's Space and return the balance paid to Exhibitor. If cancellation occurs within 59 days or less prior to the first day of show, Management is entitled to the entire cost of the Exhibitor's Space, which includes money paid by Exhibitor, and Exhibitor will owe Manager any outstanding balance and fees. Management shall retain these monies as reasonable damages for the direct and indirect costs incurred by Management for organizing, setting up and providing space for Exhibitor, and losses and additional expenses caused by Exhibitor's withdrawal including re-let of the space.
18. **LIMITATION OF MANAGEMENT LIABILITY** - The fees paid by Exhibitor do not include any payment for assumption of risk by Management. ACCORDINGLY, IN NO EVENT SHALL MANAGEMENT BE LIABLE FOR ANY GENERAL, SPECIAL, DIRECT, INDIRECT, CONSEQUENTIAL (INCLUDING LOST PROFITS, BUSINESS INTERRUPTION OR LOSS OF BUSINESS INFORMATION), INCIDENTAL OR OTHER DAMAGES ARISING OUT OF OR RELATING TO THE SHOW OR ANY SERVICES PROVIDED HEREUNDER, REGARDLESS OF WHETHER ANY CLAIM IS BASED ON WARRANTY, CONTRACT OR TORT, AND INCLUDING DAMAGES OR EXPENSE INCURRED BY EXHIBITOR IF THE SHOW IS CANCELLED FOR ANY REASON. IN NO EVENT SHALL MANAGEMENT BE LIABLE TO EXHIBITOR FOR ANY REASON IN AN AMOUNT IN EXCESS OF THE TOTAL AMOUNT PAID BY EXHIBITOR TO MANAGEMENT HEREUNDER.
19. **SECURITY FOR SPACE PAYMENTS** - Failure of Exhibitor to make any required payments to Management shall entitle Management to take possession of Exhibitor's display and merchandise in Exhibitor's Space, and Exhibitor herby grants Management a security interest in all such display and merchandise, permits Management to retain the same as security for such unpaid amount, and agrees that Management shall have the right to dispose of same without notice to Exhibitor in such manner as it deems appropriate. Exhibitor agrees that Management shall retain sale proceeds to satisfy Exhibitor's unpaid amounts and to cover expenses incurred in disposing of such property, with any excess proceeds paid to Exhibitor.
20. **DESTRUCTION OR INTERRUPTION -** If Management determines that the premises where the show is to be held have become unfit for occupancy, or if the premises are materially interfered with by reason of strike, embargo, injunction, act of war, act of God, any other emergency, or any act or event, this agreement may be terminated or suspended by Management. It is expressly agreed that such a termination shall not constitute a breach of the contract. If for any reason Management determines the location of the show should be changed, or the dates of the show postponed, no refunds will be made, but Management shall assign to the Exhibitor, in lieu of the original space, such other space that Management determines to be reasonably equivalent to the reserved space hereunder and the Exhibitor agrees to use such space under the same terms as this Agreement and Rules and Regulations as set out for the show. In the event of such termination or suspension, the Exhibitor waives any and all damages and agrees that Management may, after deducting all costs and expenses, including a reserve for claims, refund to the Exhibitor as and for complete settlement and discharge of said Exhibitor's claims and demands the prorate amount of all monies paid by all Exhibitors.
21. **INDEMNIFICATION** - Exhibitor shall protect, defend, indemnify and hold harmless Management and the Lane Events Center from and against any and all claims, damages, losses and expenses, including attorneys' fees, arising out of, or resulting from the Exhibitor's display and exhibit and the actions of Exhibitor and its officers, contractors, licensees, agents, employees, guests, and visitors.
22. **INSURANCE** - Exhibitor shall secure and maintain liability insurance, at its own expense, naming the Management and the Lane Events Center as additional insured. Exhibitor will furnish a certificate of insurance to Management.
23. **ATTORNEY'S FEES** - In the event any suit or other proceeding is commenced for the purposes of interpreting or enforcing any provision of this agreement, the prevailing party in such proceeding shall be entitled to recover its reasonable attorneys' fees and related expenses in such proceeding and upon appeal thereof, in addition to the costs and disbursements allowed by law.
24. **CONSENT TO USE OF EXHIBITOR'S LIKENESS** - Exhibitor hereby grants Management a non-exclusive right to use visual and audio reproductions of Exhibitor, its Space and exhibit, and its employees, including without limitation, recordings, photographs, videos and other images or likenesses for the purpose of Management's promotions in this, and future Shows.
25. **EXHIBITOR'S MANUAL** – Prior to the Show, Exhibitor will receive an Exhibitor's Manual that provides specific rules and guidelines for Exhibitor's Space, exhibit, and display, and the Building, with regard to booth construction, move-in and move-out, and Building and fire code restrictions. The Exhibitor manual does not add or change the provisions of this agreement; however, Exhibitor agrees to follow all rules included in the Exhibitor's Manual, and Exhibitor agrees that this agreement may be terminated and Exhibitor may be removed without refund for violating any such rules.
26. **USE OF NAME –** Use of the name "Lane County Home Improvement Show" or any agent of said organization in recommendations of a product of service is prohibited.

Contact: Berg Productions, Inc. Phone: 541-484-9247 Email: info@EugeneHomeShow.com Federal TIN: 93-104065

Electrical Services Order Form

Rates Effective January 1, 2024 – Subject to change without notice

40th Lane County Home Improvement Show ~ October 23-25, 2026

BERG will supply each 10x10 Booth is supplied with 1 Complimentary Outlet @ 500 Watts automatically.

ONLY ORDER MORE POWER if you need more than 500 watts, one plug, per 10x10:

- Save $$$ if Ordered by Friday, October 13th –

PRE-PAYMENT REQUIRED FOR ELECTRICAL SERVICES

Quantity	Electrical Order	Advance Order Pricing (7 days prior)	Floor Order Pricing
	120 Volts 60 Cycle A.C.		
	Standard Configuration of one circuit or (4-500 watt outlets)	**100.00**	**120.00**
	Single circuit over 2000 watts-20 amp & higher	**120.00**	**140.00**
	208 Volt Single or 3 Phase		
	One Outlet up to 3000 watts 15 amps or less	**130.00**	**160.00**
	One Outlet 4000-6000 watts 30 amps or less	**180.00**	**220.00**
	Over 6000 watts-30 amps up to 100 amps w/o cord	**230.00**	**280.00**
	Over 6000 watts-30 amps up to 100 amps w/ cord rental	**250.00**	**310.00**
	Over 100 amps - **Call for quote**		
Quantity	**Miscellaneous**	**Advance Order Pricing (7 days prior)**	**Floor Order Pricing**
	Cable Ramps	**40.00**	**50.00**
Hours	**Hourly Rates**	**Pricing**	
	Electrician	**Prevailing Wage**	
	Stand By and Maintenance	**Prevailing Wage**	
	Overtime	**Prevailing Wage**	
	Sunday and Holidays	**Prevailing Wage**	

Customer/Billing Information:

Company Name: _____ **Event:** _____

Contact Name: _____ **Phone:** _____

Email (for receipt): _____

Address (& City, State, Zip): _____

Authorized Signature _____ **Date:** _____

FLOOR ORDERS MUST BE PAID BEFORE ELECTRICAL SERVICE IS INSTALLED

Please return this form with check made payable to: Lane Events Center

OR

E-mail to Vicki@LaneEventsCenter.org or call to make a credit card payment

Note: there is a 3% service fee attached to all credit card transactions

Lane Events Center - 796 W. 13th Avenue, Eugene, OR 97402 T: 541-682-4292 F: 541-682-3614

Trade Show Supply House, Inc.

P.O. Box 1536 Brush Prairie, WA 98606

PHONE (360) 624-4498

Email: Orders@thedecorator.net

RENTAL EQUIPMENT EXCLUSIVELY FOR:

LANE COUNTY HOME IMPROVEMENT SHOW

October 23 – 25, 2026

The Show will use BLACK DRAPE **TERMS:**

ALL ORDERS RECEIVED BY: **October 9, 2026** WILL BE GIVEN A 20% DISCOUNT

ALL ORDERS MUST BE ACCOMPANIED WITH PAYMENT IN FULL. *ALL EQUIPMENT IS ON A RENTAL BASIS ONLY, WHICH INCLUDES DELIVERY TO AND PICK UP FROM BOOTH.

Qty	Description	Amount	Qty	Description	Amount
	DISPLAY TABLES –30" HIGH x 30" WIDE			**CHAIRS**	
	4' UNSKIRTED TABLE 30" HIGH	$20.00		PLASTIC SIDE CHAIR	$10.00
	6' UNSKIRTED TABLE 30" HIGH	$25.00		FABRIC SIDE CHAIR	$30.00
	8' UNSKIRTED TABLE 30" HIGH	$30.00		BARSTOOL	$40.00
	4' SKIRTED TABLE	$45.00			
	6' SKIRTED TABLE	$50.00			
	8' SKIRTED TABLE	$55.00		**ACCESSORIES**	
	TABLE SKIRT ONLY 30"H	$20.00		WASTEBASKET	$10.00
	DISPLAY COUNTERS – 42" HIGH x 30" WIDE			EASEL	$20.00
	4' UNSKIRTED COUNTER 42'" HIGH	$30.00		CHROME SIGN HOLDER	$35.00
	6' UNSKIRTED COUNTER 42" HIGH	$35.00		STANCHION	$20.00
	8' UNSKIRTED COUNTER 42" HIGH	$40.00		6' RED VELOUR ROPE	$15.00
	4' SKIRTED COUNTER 42"H	$55.00		COCKTAIL ROUND 30"H x 30"D	$40.00
	6' SKIRTED COUNTER 42"H	$60.00		COCKTAIL ROUND 42"H x 30"D	$50.00
	8' SKIRTED COUNTER 42"H	$65.00		WHITE, RED OR BLACK LINEN	$25.00
	COUNTER SKIRT ONLY 42"H	$25.00		**CUSTOM DRAPE**	
				3' HIGH DRAPE / PER LF	$ 4.00
	SKIRT COLORS AVAILABLE (CIRCLE CHOICE)			8' HIGH DRAPE / PER LF	$ 6.00
	BLUE, WHITE, BLACK, RED, GREEN, TEAL,				
	BURGUNDY, SILVER			COLORS AVAILABLE (CIRCLE CHOICE)	
				BLUE, WHITE, RED, BLACK, GREEN,	
	BOOTH CARPET			**SILVER, BURGUNDY**	
Qty	**Description**	**Amount**			
	10' X 10' BOOTH CARPET	$110.00			
	10' X 20' BOOTH CARPET	$220.00			
	10' X 30' BOOTH CARPET	$330.00			
	10' X 40' BOOTH CARPET	$440.00			
	FOAM PADDING / SQ. FT	$ .60			
	VISQUEEN / SQ. FT	$ .25			
	CARPET COLORS AVAILABLE (circle choice)				
	BLUE, RED, BLACK, GREEN, TUXEDO				
	To access the Order Services Storefront, please look for a welcoming email from orders@thedecorator.net or click the secure link below to request access. https://tradeshowsupplyhouse.boomerecommerce.com//home/19/EventHome			**Need Assistance? Please contact our team at orders@thedecorator.net or call us at 360-624-4498 and we will make sure you have everything you need.**	

TRADE SHOW SUPPLY HOUSE, inc.

Please Sign In

Email address

Password

Log in

Forgot Password? Request Access

Welcome to the Exhibitor Ordering Portal

This area provides a convenient place to order your booth needs for your upcoming event. We are here to help make sure you have exactly what you need for a successful show.

Existing Users

If you have previously placed an order with us, please enter your login name and password above to access your account.

New Users

Need access to order for your event? Please contact Trade Show Supply House, Inc. directly to request a new login. Once your account has been created, you will be able to log in and place your order online.

Need Assistance? • We're Happy to Help

If you need help logging in, ordering services, or requesting access, please contact our team for assistance.